Field experience with transmission oil EP Gear Synth 150

Z. Aleš

Department for Quality and Dependability of Machines, Faculty of Engineering, Czech University of Life Sciences in Prague, Prague, Czech Republic

Abstract: The machinery operated in agriculture and forestry has been required to use less harmful vital fluids since a few years ago. These requirements are highly urged especially for the machines which are operated close to aquatic resources, water flows, fields, and in forests. Biodegradable vital fluids seem as a suitable solution from the environmental viewpoint. On the other hand, from the technical viewpoint their usage seems sort of problematic. The author started to carry out long-term stability tests of biodegradable transmission oil and mineral transmission oil used in tractor end rear boxes in the dependence on the operating time. This article pinpoints partial results of the operational tests and evaluates the impact on the technical condition of the machinery.

Keywords: operating time; biodegradable transmission oil; lubricants; stability test

Biodegradable oils represent one of the ways how to achieve sustainable operation of machines and devices with regard to ecology. Transmission oils are facing higher ecological and performance requirements at present. Especially the customer's demand and tightened up legislation on the operation of machinery and devices are the main factors of the requirements mentioned. Beyond any doubt, lubricants have a negative influence on the environment, especially in the context of soil, water, and food chain contamination. Biodegradability is the property of a particular product which affects the environmental balance during its life cycle.

The currently constructed and produced machines work with mineral oils which are considered as harmful in relation to the environment (Kržan & Vižitin 2003). The transition to biodegradable oils involves several technical issues. It is necessary to carry out laboratory experiments to describe the influence of the biodegradable oils influence on the operation and machinery life cycle. After laboratory testing, it is suitable to carry out an operational test of the respective oil. It is necessary to carry out the operational testing of biodegradable oils in the dependence on the operating time. It is also essential to keep track of other indicators which are affected by biodegradable oil. During the experiment, it is necessary to keep track of the mechanical part wear (surface of gear teeth) as well as the changes of biodegradable oil properties.

It is quite complicated to determine the operating time exactly and correctly. The operating time evidence of machines and devices may be realised in different ways. The machine can be equipped with a measuring device which keeps track of various data (travelling distance, amount of used work hours). Such a system is widespread, but the user is not able to monitor more indicators at one time. Besides that inaccuracy occurs, during the monitoring of the operating time. That is why it is appropriate to use such a device which is independent of the operating personnel (Jurča *et al.* 2004).

It is possible to formulate the operating time as the performance range. Such an interpretation of the operating time respects the possible variability of the operating mode. The given definition shows that operating time need not be the time period because it is possible to give the performance range in different units (number of revolutions of gear wheels). The operating time monitoring is more demanding as compared to the time used (calendar time of machinery including breaks to the occurrence of the terminal state). However, the operating time describes better the level of the operational stress and also provides better information about the current technical state. The operating time does not describe in any case the variability in the construction quality, production quality of machinery, and influence of the operating personnel (Havlíček *et al.* 1989).

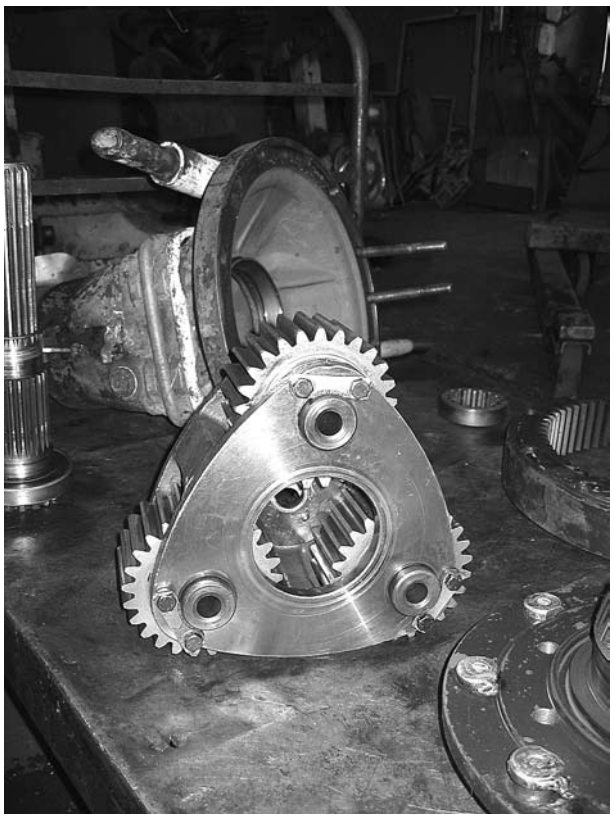

Figure 1. Tooth gear of end gear box

MATERIAL AND METHODS

A few experiments were carried out in the past concerning field experiments with biodegradable oils. The last experiment was focused on the comparison of biodegradable and mineral transmission oils in the service conditions. During the operating time measuring, MPH II measuring device was used for the exact monitoring and counting of the operating time of the machine. The operating time of the tractor Zetor 12145 rear end gear box was kept tracked during the experiment. The right side end rear gear box was disassembled and mechanically cleaned at the beginning of the experiment. Each part of the gear box was degreased. The left side end rear gear box was only rinsed out with clean oil. Both end rear gear boxes were filled with the transmission oils tested. The left side end rear gear box was filled with mineral transmission oil Gyrogate PP 90. The right side end rear gear box was filled with biodegradable fully synthetic transmission oil EP Gear Synth 150-Panolin (Figure 1).

Automobile transmission oil Gyrogate PP 90 is intended for lubricating gear boxes and final gears of automobiles as well as constructing and farming machineries working under high pressure at high speed and low torque. This oil is made of mineral oils (ISO VG) with the addition of extreme pressure and anti-wear additives. Table 1 shows the technical specification of this transmission oil.

Transmission oil EP Gear Synth is fully synthetic, biodegradable, high performance oil for industrial gear boxes and ball and sliding bearings. This transmission oil is characterised by these properties: outstanding oxidation stability at high revolutions, better adhesion to metal surfaces in comparison to mineral transmission oils. This oil withstands a wide temperature range. Technical specifications are shown in Table 1.

Figure 2. Measuring device MPH II

Table 1. Technical specification of used transmission oils

Property	Gyrogate PP 90	EP Gear Synth 150
Density at 20°C (g/cm^3)	0.880–0.950	0.921
Viscosity at 40°C (mm2/s)	145.0–150.0	150.0
Viscosity at 100°C (mm2/s)	14.5	18.8
Flash Point (°C)	240	300
Pour Point (°C)	–28	–43
Viscosity Index	95	142
API Service	GL-4	GL-4

It is obvious that the transmission oil EP Gear Synth 150 has better parameters compared to transmission oil Gyrogate PP 90, especially as concerns viscosity, viscosity index, flash point, and pour point.

The measuring device MPH II was used for a precise monitoring of the operating time of the end gear boxes. Figure 2 shows the measuring device MPH II. This measuring device keeps tracking several data specifications in the time related to the travelling wheel of the farming tractor.

The following indicators are monitored:
– Travelling distance;
– Working time;
– Cultivated area;
– Speed in time;
– Immediate machine performance.

In order to obtain information on the cultivated area, it is necessary to enter to the measuring device the information on the mesh of the aggregated device working together with the tractor. The information on the travelling distance is the most important parameter of the data obtained in the case of the exact operating time monitoring.

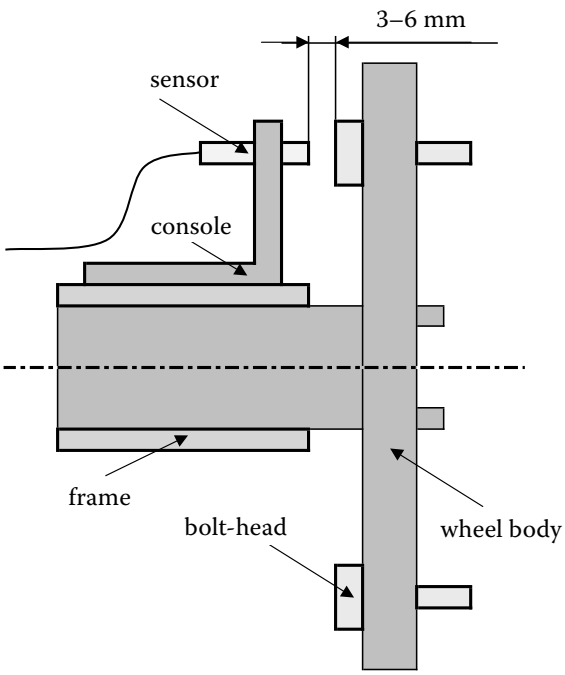

Figure 3. Scheme of sensor installation

The measuring device used consists of an axle speed sensor, a console for sensor position fixing, a board computer, and electrical installation connection to the electrical system of the tractor. The measuring device MPH II was installed on the tractor. It was necessary to ensure the proper position of the axle speed sensor of the end rear wheel, as shown in Figure 3.

The collected data have been saved in the detachable memory. This memory is designed to the connected through the reader with the computer. It is possible to transfer the data saved to the computer through the interface of the Center Point program. The output of the data collected from the program Center Point is shown in Figure 4.

It is possible to transfer the collected data from the program Center Point straight to MS Excel. It is suitable to process the data into summary pivot tables and charts for better visualisation of the data with MS Excel tools. An example of the processed data is given in Figure 5.

The processed data provides information on the operating time of the end gear boxes. The algorithm of calculation of the number of cogged gear revolutions follows:
– Conversion of travelling distance, into the number of revolutions of the rear wheel. The circumference of the driving wheel is 4.9 m.
– In order to determine the number of revolutions of the bigger toothed gear it is necessary to divide the travelling distance by the driving-wheel circumference.

The number of revolutions of mating wheels is calculated from the speed ratio.

The given information about the operating time may be considered as appropriate information about

Central point

Klíč Položky

Zobrazení výsledků

Vše | Data | Změny nastavení | Změna času | Změna záběru | Změna obvodu | Změna hesla | Změna počtu impulsů

Datum, čas	Terminál	Ujetá vzdálenost (km)	Odpracovaná plocha (Ha)	Pracovní čas (hh:mm:ss)
02.11.2007 06:35	1281	13,403	0,0000	0:00:00
03.11.2007 07:35	1281	15,868	0,0000	0:00:00
04.11.2007 07:56	1281	9,800	0,0000	0:00:00
05.11.2007 07:23	1281	9,947	0,0000	0:00:00
06.11.2007 07:27	1281	14,099	0,0000	0:00:00
07.11.2007 06:41	1281	21,283	0,0000	0:00:00
08.11.2007 06:38	1281	14,083	0,0000	0:00:00
09.11.2007 06:32	1281	14,531	0,0000	0:00:00
10.11.2007 07:54	1281	11,935	0,0000	0:00:00
11.11.2007 08:05	1281	16,113	0,0000	0:00:00

Figure 4. Output of program Center Point

the stress of oil filling. The procedure of oil sampling for analysis:

- Oil sampling must be done during the normal operation of the machinery. This ensures that the oil is truly representative of the conditions within the rear box.
- Placing the tractor on level surface.
- Visual check of all bonds of the gear box.
- Disassembly of the checking and filling bolt of the gear box.
- It is important for the sample container, to be totally clean and free of moisture before the sample is taken.
- Taking the sample (200 ml) of transmission oil in constant height using a syringe and a cannula.
- Discharge of the oil sample to the sample container.
- The container should be properly sealed to prevent any contamination or loss of oil during the transit.
- Sample information sheet has to be completely and correctly filled out with this information: the brand of oil, the tractor and gear box identification, the date of the last and current sampling.
- Adding the missing volume of transmission oil to the gear box for stock supplies.
- Closing the gear box with the checking and filling bolts.
- Cleaning and storing of the sampling equipment.
- Storing the taken samples in a dark and cool place before analyses.

After oil sampling, these analyses were carried out: capillary ferrography in order to determine the amount of wear particles, and the changes of kinematic viscosity at 40°C.

RESULTS

The operating time was monitored and kept tracked within the first three months depending on the calendar time. The data from this period are shown in the graph in Figure 5. The dashed line represents the day average or the travelling distance which is approximately 15 km.

Two oil samples were taken from the gear boxes during this period. Red dots in the graph represent the days on which the samples were taken.

Table 2. Results of chemical analyses

	Sample No.	Gyrogate PP 90		EP Gear Synth 150	
		D_L	D_S	D_L	D_S
Density of ferrous particles	1	1 071	1 022	181	125
	2	1 168	1 102	405	338
Percentage drop of viscosity at 40°C	1	1.27		0.93	
	2	1.41		0.00	

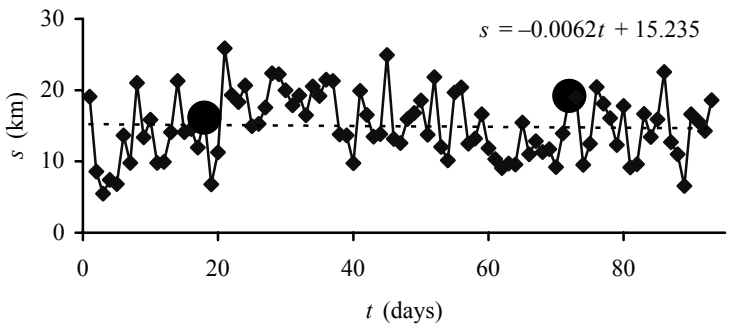

Figure 5. Collected data about travelling distance in particular days
s – travelling distance (km); *t* – No. of experiment days; ● – day of oil taking sample; ---- – day average of travelling moved distance

The chemical analyses realised showed that transmission oil Gyrogate PP 90 contained approximately three times higher DL (Density Large) and DS (Density Small) ferrous particles as compared to transmission oil EP Gear Synth 150. The results of chemical analyses are shown in Table 2.

The higher amount of ferrous density particles in the transmission oil could indicate a lower ability to form the boundary lubricating film. It is necessary to mention that transmission oil Gyrogate PP 90 was filled into gear box which was only rinsed out with clean oil. Nevertheless, the experience from agricultural companies shows that there is no time for proper disassembling and cleaning before each oil change. Kinematic viscosity was compared for the first sample with clean oil sample and for the second sample with the first sample. It is obvious from Table 2 that kinematic viscosity almost did not change in either type of transmission oil. That could be caused by an appropriate choice of transmission oils. On the other hand this result could be caused by a low operational stress because these oils had been used so far only for three months.

DISCUSSION

The given method of how to monitor the operating time using the measuring device MPH II for farming machinery is sufficiently accurate and besides that it provides complete information about the cultivated area, working time, speed of tractor in time, and immediate machine performance. Suitable processing of the collected data can help to obtain lucid summaries about the machine performance in a given period. This information may be used for the evaluation of the efficiency of particular machinery. Furthermore, the information obtained may be used for describing tribotechnical dependencies of the machinery and transmission oil changes related to the operating time.

In spite of the fact that only partial results have been presented, it is possible to assume that the use of transmission oil EP Gear Synth 150 is an acceptable solution for particular conditions. Transmission oil EP Gear Synth 150 resists mechanical stress during the gear interaction in the gear box. The presented results are preliminary. A long term survey will bring more information about tribotechnical changes of transmission oils depending on the operating time.

References

Jurča V., Hladík T., Aleš Z. (2004): Possibilities of Utilization and Data Processing of Maintenance Management Data. ČSJ, Praha. (in Czech)

Havlíček J. *et al.* (1989): Operational Dependability of Machines. SZN, Praha. (in Czech)

Kržan B., Vižitin J. (2003): Tribological properties of an environmentally adopted universal tractor transmission oil based on vegetable oil. In: Centre for Tribology and Technical Diagnostics. University of Ljubljana, Ljubljana, 827–833.

Received for publication February 13, 2008
Accepted after corrections May 28, 2008

Abstrakt

Aleš Z. (2009): **Provozní zkušenost s převodovým olejem EP Gear Synth 150.** Res. Agr. Eng., **55**: 18–23.

V provozu mobilních strojů pracujících v přírodě se v posledních letech stále silněji prosazují požadavky na používání pro přírodní prostředí méně škodlivých provozních kapalin. Tyto požadavky jsou silně prosazovány především

u strojů, které pracují v lesích, v ochranných pásmech vodních zdrojů, na zemědělské půdě, na vodních tocích. Provozní kapaliny snadno biologicky odbouratelné se proto jeví z environmentálního pohledu jako vhodné. Z pohledu technického se však jejich použití ukazuje jako poněkud problematické. Autor v příspěvku předkládá dílčí výsledky dlouhodobého experimentu s použitím odbouratelného oleje a oleje minerálního pro mazání koncových převodů traktoru v závislosti na době provozu. Jsou uvedeny a porovnány výsledky z provozu a hodnocení z hlediska dopadů na technický stav strojů.

Klíčová slova: doba provozu; biologicky odbouratelný převodový olej; oleje; test stability

Corresponding author:

Ing. Zdeněk Aleš, Česká zemědělská univerzita v Praze, Technická fakulta, katedra jakosti a spolehlivosti strojů, Kamýcká 129, 165 21 Praha 6-Suchdol, Česká republika
tel.: + 420 224 383 304, e-mail: ales@tf.czu.cz